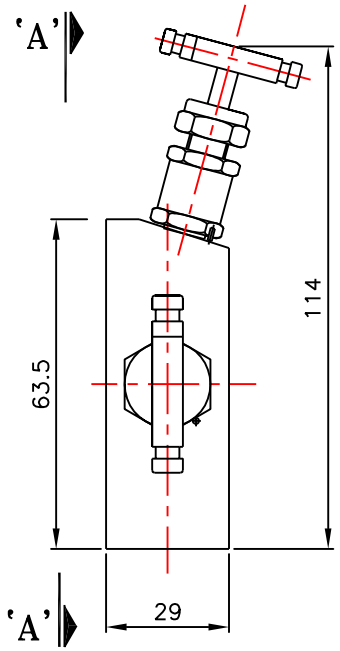

SIDE VIEW

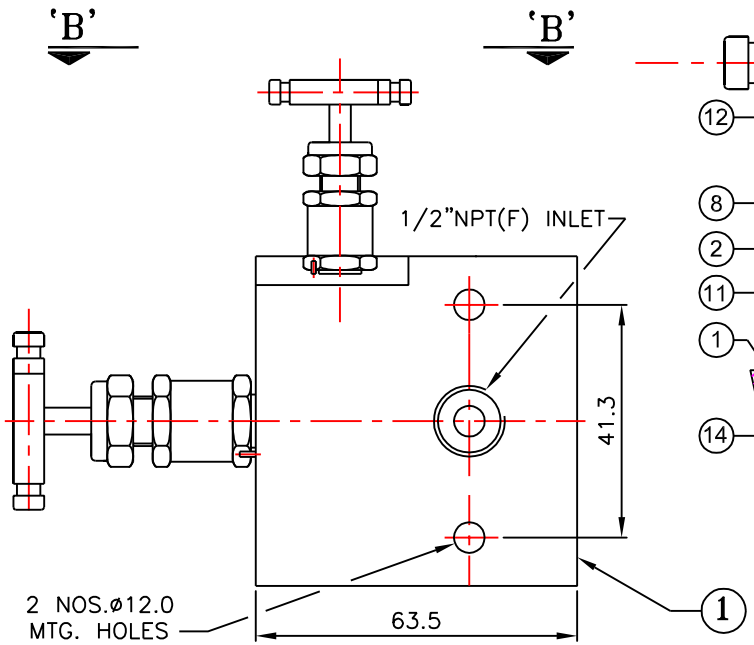

VIEW–'AA'

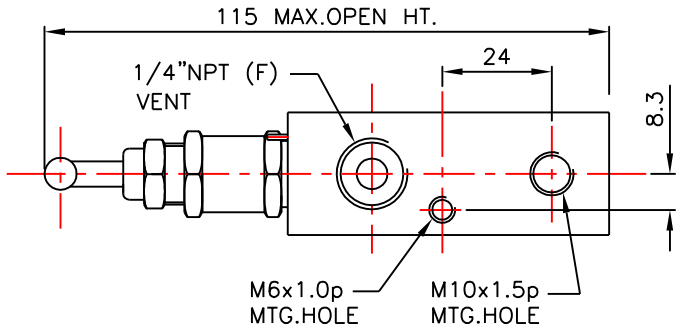

VIEW–'BB'

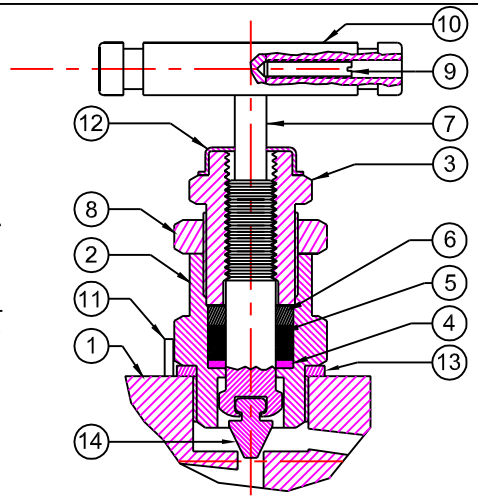

BONNET ASSEMBLY

S.NO.	DESCRIPTION	QTY.	MATERIAL
14	NON ROTATING VEE TIP	2	A564–630
13	WASHER	2	A479–316
12	DUST CAP	2	PLASTIC LD.
11	LOCK PIN	2	A479–316
10	HANDLE	2	A479–316
9	GRUB SCREW	2	STEEL
8	LOCK NUT	2	A479–316
7	SPINDLE	2	A479–316
6	PACKING WASHER	2	A479–316
5	PACKING	2	PTFE/GRAFOIL
4	WASHER	2	A479–316
3	GLAND RETAINER	2	A479–316
2	BONNET	2	A479–316
1	BODY	1	A479–316

MATERIAL OF CONSTRUCTIONS

PANAM 2 VALVE MANIFOLD PIPE TO FLANGE DESIGN FOR SEPERATE MOUNTING. CONNECTING SYSTEM IMPULSE LINES & TRANSMITTERS, HAVING SIMPLE TWO VALVE CONFIGURATION WHICH ALLOWS FOR EASY BLOCK, BLEED & CALIBRATION OF A STATIC PRESSURE TRANSMITTER OR GAUGE.

FEATURES :

316 S.S. BODY CONSTRUCTION FOR SUPERIOR CORROSION RESISTANCE.
NON ROTATING VEE TIP PREVENTS GALLING & PROMOTES REPETITIVE SHUT-OFF.
OPTIONAL GRAPHOIL PACKING MATERIAL IS AVAILABLE FOR
HIGH TEMP. RATING 1000°F @6000 PSI

TESTING:

PNEUMATIC TEST:– EACH VALVE IS TESTED WITH NITROGEN AT 100 Psi IN ACCORDANCE WITH MSS–SP–61 FOR SEAT & PACKING LEAKAGE.

HYDRO TEST:– PERFORMED WITH PURE WATER IN ACCORDANCE WITH MSS–SP–61. BODY TESTED AT 1.5 TIMES & SEAT LEAKAGE TESTED AT 1.1 TIMES OF THE WORKING PRESSURE.

DESIGN STANDARD :

PRESSURE & TEMPERATURE RATING ARE SELECTED FROM **ANSI B16.34**
STANDARD CLASS VALVES BASED ON **ANSI B16–CLASS 2500**
OPTIONAL SOUR GAS SERVICE CONFIRMS TO NACE STD. **MR–01–75**

TECHNICAL DATA					
Seat	Pr. Rat.	Temp.Rat.		Cv	Orifice
		PTFE	GRAFOIL		
METAL SEAT	6000 PSI (41300 kpa)	–20 to 250° F (–29° to 121°C)	–20 to 600° F (–29° to 315°C)	0.52 max.	4.8 mm.

NOTE:–1) DIMENSIONS ARE IN MM.FOR REFERENCE ONLY,SUBJECT TO CHANGE.
2) APPROXIMETE WEIGHT= 0.95 KG. (2.1 LBS)

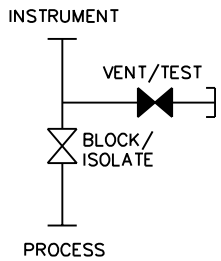

SCHEMATIC

REV.	DESCRIPTION	BY	DATE

REVISION

TITLE:– 2 VALVE MANIFOLD (PIPE TO FLANGE)
6000 PSI RANGE BASE VENTED

DRN.	CDC	SCALE – NTS.	
CHD.	ET	DATE – 25.01.2005	
APPD.	JP	DRG.NO.: 2VM–SS–8–DM	R0

PANAM ENGINEERS
AN ISO 9001 : 2000 COMPANY
MUMBAI – INDIA